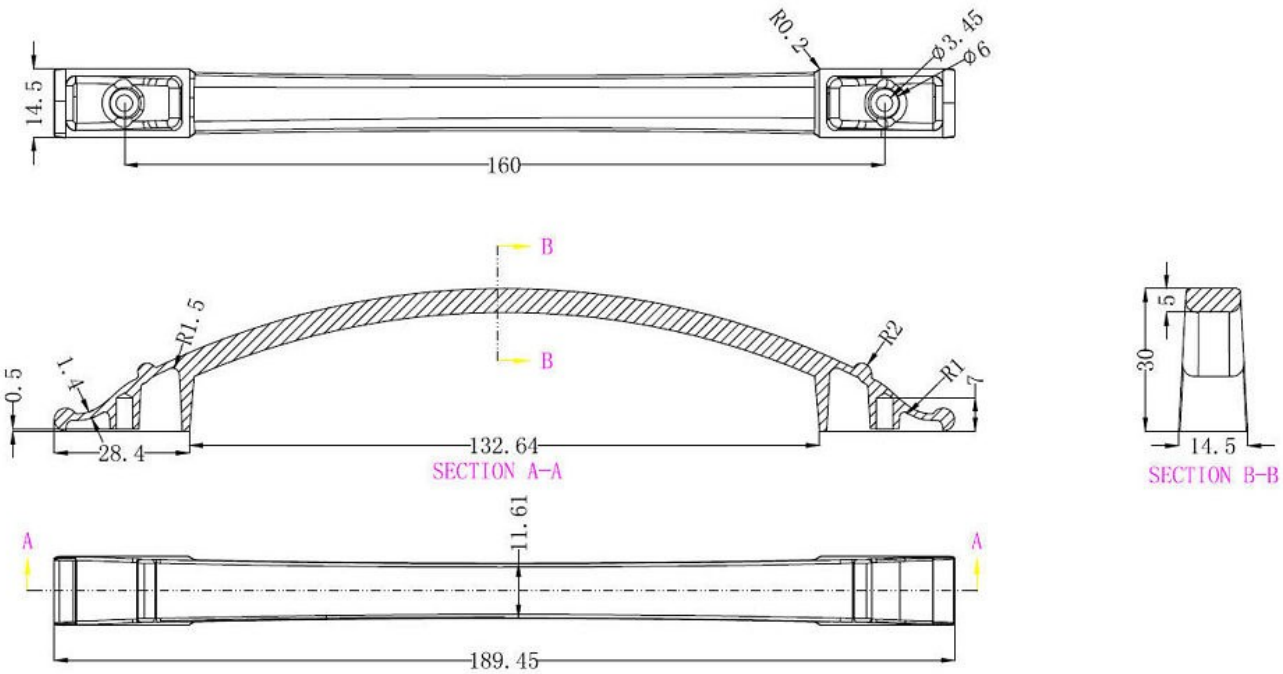
R0.2
⌀3.45
⌀6
14.5
160
B
B
R1.5
R2
R1
0.5
1.4
7
28.4
132.64
SECTION A-A
11.61
A
A
189.45
5
30
14.5
SECTION B-B